APEX DYNAMICS, INC.

HIGH PRECISION
HIGH SPEED
PLANETARY GEARBOX

AF / AFR Series

Stainless

Apex Dynamics, Inc. is the world's most productive manufacturer of servomotor drive planetary gearboxes for precision automation machinery. From our 800,000+ square foot ISO 9001:2008 manufacturing facility, based in Taichung, Taiwan, we manufacture to stock using the newest precision machine tools and quality test and inspection equipment. Complete focus on quality and precision allows us to produce our high quality gearheads at precision levels down to less than 1 arc minute (1/60 th of a degree), with consistency and high reliability.

Based on more than twenty years of accumulated manufacturing and marketing experience, plus the highest level of technical production capabilities, Apex Dynamics, Inc. designs and builds technically advanced, high speed, low backlash servo application planetary gearboxes. Our Break through patented technology (over 6 patents), provides the customer with the optimum high precision helical reducer at a reasonable price. We are continuously improving processes, finding proper and effective methods to provide customers new solutions for difficult applications, and developing new products.

The primary focus in daily operation is quality. We pride ourselves on our dedication to quality; our duty - is customer satisfaction.

AF Series

AF075 – 010 – S1 – P1 / MOTOR

Gearbox Size:
AF042, AF060, AF060A, AF075, AF075A
AF100, AF100A, AF140, AF140A
AF180, AF220

Shaft Option:
S1: Smooth Output Shaft
S2: Output Shaft with Key
S3: DIN 5480

Motor Designation:
Manufacturer Type
And Model

Ratio:
1 Stage: 3, 4, 5, 6, 7, 8, 9, 10
2 Stage: 12, 15, 16, 20, 25, 28, 30, 32, 35, 40, 45, 50, 60, 70, 80, 90, 100

Backlash:
P0: Micro Backlash
P1: Reduced Backlash
P2: Standard Backlash

Ordering Example: AF075-010-S1-P1 / SIEMENS 1FT6 041-4AF71

AFR Series

AFR075 – 010 – S1 – P1 / MOTOR

Gearbox Size:
AFR042, AFR060, AFR060A
AFR075, AFR075A, AFR100, AFR100A
AFR140, AFR140A, AFR180, AFR220

Shaft Option:
S1: Smooth Output Shaft
S2: Output Shaft with Key
S3: DIN 5480

Motor Designation:
Manufacturer Type
And Model

Ratio:
1 Stage: 3, 4, 5, 6, 7, 8, 9, 10, 12, 14, 16, 20
2 Stage: 12, 15, 16, 20, 25, 28, 30, 32, 35, 40, 45, 48, 50, 60, 64, 70, 80, 90, 100, 120, 140, 160, 180, 200

Backlash:
P0: Micro Backlash
P1: Reduced Backlash
P2: Standard Backlash

Ordering Example: AFR075-010-S1-P1 / SIEMENS 1FT6 041-4AF71

©2019 by APEX DYNAMICS, INC.
APEX DYNAMICS, INC. reserves modification and copyrights of all technical specifications, illustrations and drawings in this catalog in allowance for continuous products development and advancement.
For the newest data and information, please visit http://www.apexdyna.com/

Specifications / AF Series

Gearbox Performance

Model No.		Stage	Ratio[1]	AF042	AF060	AF060A	AF075	AF075A	AF100	AF100A	AF140	AF140A	AF180	AF220
Nominal Output Torque T_{2N}	Nm	1	3	20	55	–	130	–	208	–	342	–	588	1,140
			4	19	50	–	140	–	290	–	542	–	1,050	1,700
			5	22	60	–	160	–	330	–	650	–	1,200	2,000
			6	20	55	–	150	–	310	–	600	–	1,100	1,900
			7	19	50	–	140	–	300	–	550	–	1,100	1,800
			8	17	45	–	120	–	260	–	500	–	1,000	1,600
			9	14	40	–	100	–	230	–	450	–	900	1,500
			10	14	40	–	100	–	230	–	450	–	900	1,500
		2	12	19	50	50	140	140	290	290	542	542	1,050	1,700
			15	20	55	55	130	130	208	208	342	342	588	1,140
			16	19	50	50	140	140	290	290	542	542	1,050	1,700
			20	19	50	50	140	140	290	290	542	542	1,050	1,700
			25	22	60	60	160	160	330	330	650	650	1,200	2,000
			28	19	50	50	140	140	300	300	550	550	1,100	1,800
			30	20	55	55	150	150	310	310	600	600	1,100	1,900
			32	17	45	45	120	120	260	260	500	500	1,000	1,600
			35	19	50	50	140	140	300	300	550	550	1,100	1,800
			40	17	45	45	120	120	260	260	500	500	1,000	1,600
			45	14	40	40	100	100	230	230	450	450	900	1,500
			50	22	60	60	160	160	330	330	650	650	1,200	2,000
			60	20	55	55	150	150	310	310	600	600	1,100	1,900
			70	19	50	50	140	140	300	300	550	550	1,100	1,800
			80	17	45	45	120	120	260	260	500	500	1,000	1,600
			90	14	40	40	100	100	230	230	450	450	900	1,500
			100	14	40	40	100	100	230	230	450	450	900	1,500
Emergency Stop Torque T_{2NOT}[2]	Nm	1,2	3~100	3 times of Nominal Output Torque										
Nominal Input Speed n_{1N}	rpm	1,2	3~100	5,000	5,000	5,000	4,000	4,000	4,000	4,000	3,000	3,000	3,000	2,000
Max. Input Speed n_{1B}	rpm	1,2	3~100	10,000	10,000	10,000	8,000	8,000	8,000	8,000	6,000	6,000	6,000	4,000
Micro Backlash P0	arcmin	1	3~10	–	–	–	≤1	–	≤1	–	≤1	–	≤1	≤1
		2	12~100	–	–	–	–	–	≤3	≤3	≤3	≤3	≤3	≤3
Reduced Backlash P1	arcmin	1	3~10	≤3	≤3	–	≤3	–	≤3	–	≤3	–	≤3	≤3
		2	12~100	≤5	≤5	≤5	≤5	≤5	≤5	≤5	≤5	≤5	≤5	≤5
Standard Backlash P2	arcmin	1	3~10	≤5	≤5	–	≤5	–	≤5	–	≤5	–	≤5	≤5
		2	12~100	≤7	≤7	≤7	≤7	≤7	≤7	≤7	≤7	≤7	≤7	≤7
Torsional Rigidity	Nm/arcmin	1,2	3~100	3	7	7	14	14	25	25	50	50	145	225
Max. Radial Load F_{2rB}[3]	N	1,2	3~100	610	1,400	1,400	4,100	4,100	9,200	9,200	14,000	14,000	18,000	33,000
Max. Axial Load F_{2aB}[3]	N	1,2	3~100	320	1,100	1,100	3,700	3,700	5,820	5,820	11,400	11,400	19,500	16,300
Max. Tilting Moment M_{2K}	Nm	1,2	3~100	20	85	85	380	380	970	970	1,840	1,840	2,740	5,030
Efficiency η	%	1	3~10	≥97%										
		2	12~100	≥94%										
Weight	kg	1	3~10	0.6	1.3	–	3.7	–	6.9	–	12.6	–	25.5	45
		2	12~100	0.8	1.5	2	4.1	5.5	8.1	10.6	16.6	20.2	31.5	57
Operating Temp	°C	1,2	3~100	-10°C~90°C										
Lubrication		1,2	3~100	Synthetic lubrication oils										
Degree of Gearbox Protection		1,2	3~100	IP65										
Mounting Position		1,2	3~100	all directions										
Noise[4]	dB(A)	1,2	3~100	≤56	≤58	≤60	≤60	≤63	≤63	≤65	≤65	≤67	≤67	≤70

(1) Ratio ($i=N_{in} / N_{out}$)
(2) Max. acceleration torque T_{2B} = 60% of T_{2NOT}
(3) Applied to the output shaft center at 100 rpm
(4) The dB values are measured by gearbox with ratio 10 (1-stage) or ratio 100 (2-stage), no loading at 3,000 RPM or at the respective Nominal Input Speed by bigger model size.
By lower ratio and/or higher RPM, the noise level could be 3 to 5 dB higher.

Max. Tilting Moment M_{2k}

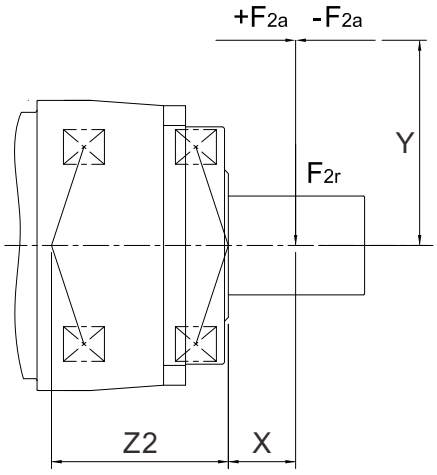

$$M_{2K} = \frac{F_{2a} * Y + F_{2r} * (X+Z2)}{1000}$$

M_{2K} : 【Nm】
F_{2a}, F_{2r} : 【N】
X, Y, Z2 : 【mm】

AF / AFR	042	060	075	100	140	180	220
Z2 【mm】	31	66.5	88.7	96	114.2	138.7	127.1

Note : Applied to the output shaft center at 100 rpm.

Gearbox Inertia

Model No.		Stage	Ratio	AF042	AF060	AF060A	AF075	AF075A	AF100	AF100A	AF140	AF140A	AF180	AF220
Mass Moments of Inertia J_1	kg・cm^2	1	3	0.03	0.16	–	0.61	–	3.25	–	9.21	–	28.98	69.61
			4	0.03	0.14	–	0.48	–	2.74	–	7.54	–	23.67	54.37
			5	0.03	0.13	–	0.47	–	2.71	–	7.42	–	23.29	53.27
			6	0.03	0.13	–	0.45	–	2.65	–	7.25	–	22.75	51.72
			7	0.03	0.13	–	0.45	–	2.62	–	7.14	–	22.48	50.97
			8	0.03	0.13	–	0.44	–	2.58	–	7.07	–	22.59	50.84
			9	0.03	0.13	–	0.44	–	2.57	–	7.04	–	22.53	50.63
			10	0.03	0.13	–	0.44	–	2.57	–	7.03	–	22.51	50.56
		2	12	0.03	0.03	0.16	0.16	0.61	0.61	3.25	3.25	9.21	9.21	28.98
			15	0.03	0.03	0.13	0.13	0.47	0.47	2.71	2.71	7.42	7.42	23.29
			16	0.03	0.03	0.14	0.14	0.48	0.48	2.74	2.74	7.54	7.54	23.67
			20	0.03	0.03	0.13	0.13	0.47	0.47	2.71	2.71	7.42	7.42	23.29
			25	0.03	0.03	0.13	0.13	0.47	0.47	2.71	2.71	7.42	7.42	23.29
			28	0.03	0.03	0.14	0.14	0.48	0.48	2.74	2.74	7.54	7.54	23.67
			30	0.03	0.03	0.13	0.13	0.47	0.47	2.71	2.71	7.42	7.42	23.29
			32	0.03	0.03	0.14	0.14	0.48	0.48	2.74	2.74	7.54	7.54	23.67
			35	0.03	0.03	0.13	0.13	0.47	0.47	2.71	2.71	7.42	7.42	23.29
			40	0.03	0.03	0.13	0.13	0.47	0.47	2.71	2.71	7.42	7.42	23.29
			45	0.03	0.03	0.13	0.13	0.47	0.47	2.71	2.71	7.42	7.42	23.29
			50	0.03	0.03	0.13	0.13	0.44	0.44	2.57	2.57	7.03	7.03	22.51
			60	0.03	0.03	0.13	0.13	0.44	0.44	2.57	2.57	7.03	7.03	22.51
			70	0.03	0.03	0.13	0.13	0.44	0.44	2.57	2.57	7.03	7.03	22.51
			80	0.03	0.03	0.13	0.13	0.44	0.44	2.57	2.57	7.03	7.03	22.51
			90	0.03	0.03	0.13	0.13	0.44	0.44	2.57	2.57	7.03	7.03	22.51
			100	0.03	0.03	0.13	0.13	0.44	0.44	2.57	2.57	7.03	7.03	22.51

Dimensions (1-stage, Ratio i=3~10) / AF Series

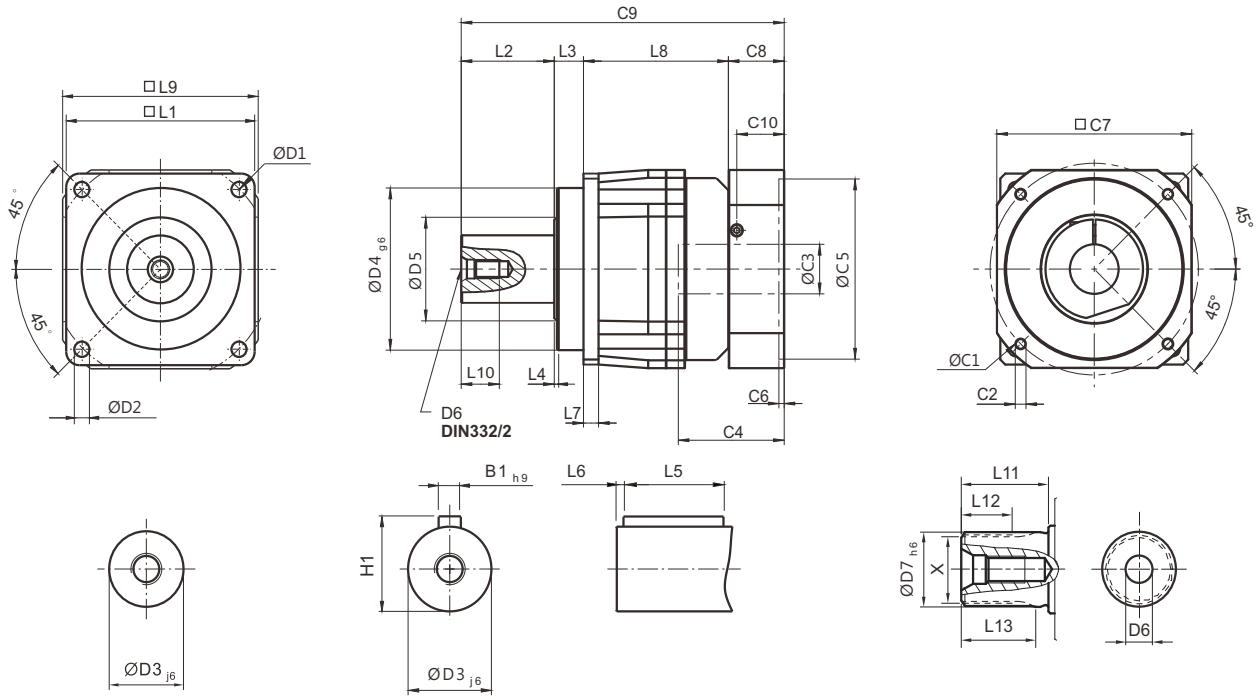

Shaft Option S1 Shaft Option S2 Shaft Option S3

[unit: mm]

Dimension	AF042	AF060	AF075	AF100	AF140	AF180	AF220
D1	50	68	85	120	165	215	250
D2	3.4	5.5	6.8	9	11	13	17
D3 j6	13	16	22	32	40	55	75
D4 g6	35	60	70	90	130	160	180
D5	22	45	60	80	75	95	115
D6	M4 x 0.7P	M5 x 0.8P	M8 x 1.25P	M12 x 1.75P	M16 x 2P	M20 x 2.5P	M20 x 2.5P
D7 h6	-	16	22	32	40	55	75
L1	42	62	76	105	142	180	220
L2	19.5	28.5	36	58	82	82	105
L3	6.5	20	20	30	30	30	33
L4	1	1.5	2	2	3	3	3
L5	16	25	32	40	63	70	90
L6	2	2	3	5	5	6	7
L7	4	6	7	10	12	15	20
L8	31	54.5	86.5	89.5	110	150	163.5
L9	42	60	90	115	142	180	220
L10	10	12.5	19	28	36	42	42
L11	-	26	26	26	40	41.5	52
L12	-	15	15	15	20	21.5	28
L13	-	21	22.5	23	33.5	33.5	45
C1[1]	46	70	100	130	165	215	235
C2[1]	M4 x 0.7P	M5 x 0.8P	M6 x 1P	M8 x 1.25P	M10 x 1.5P	M12 x 1.75P	M12 x 1.75P
C3[1]	≤11 / ≤12[2]	≤14 / ≤16[2]	≤19 / ≤24[2]	≤32	≤38	≤48	≤55
C4[1]	25	34	40	50	60	85	116
C5[1]	30	50	80	110	130	180	200
C6[1]	3.5	8	4	5	6	6	6
C7[1]	42	60	90	115	142	190	220
C8[1]	29.5	19	17	19.5	22.5	29	63
C9[1]	86.5	122	159.5	197	244.5	291	364.5
C10[1]	8.75	13.5	10.75	13	15	20.75	53
B1 h9	5	5	6	10	12	16	20
H1	15	18	24.5	35	43	59	79.5
X DIN5480	-	W16x0.8x 30x18x6m	W22x1.25x 30x16x6m	W32x1.25x 30x24x6m	W40x2x 30x18x6m	W55x2x 30x26x6m	W70x2x 30x34x6m

1. C1~C10 are motor specific dimensions (metric std shown). Refer to www.apexdyna.com and Design Tool to view your specific motor mounting system.
2. AF042M1 ratio 5, 10 offers C3 ≤ 12 option; AF060M1 ratio 5, 10 offers C3 ≤ 16 option; AF075M1 offers C3 ≤ 24 option.

Dimensions (2-stage, Ratio i=12~100) / AF Series

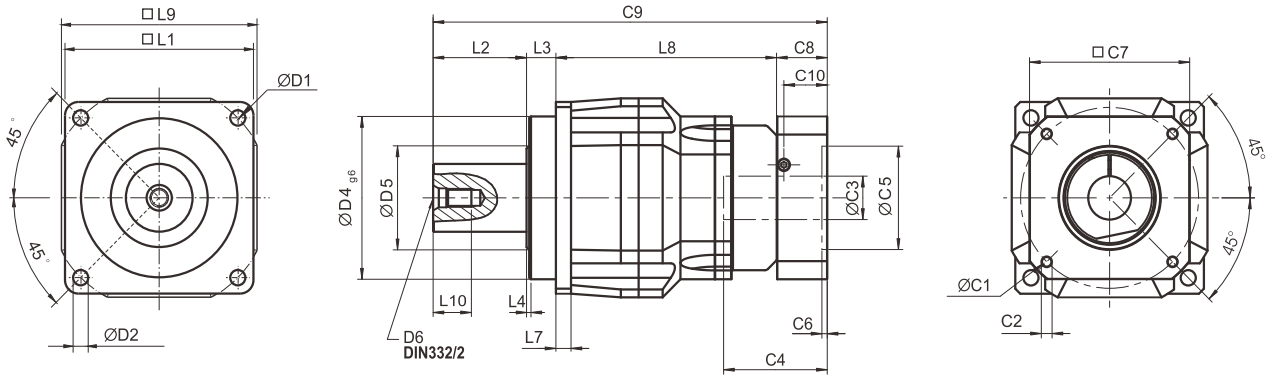

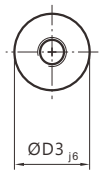

Shaft Option S1

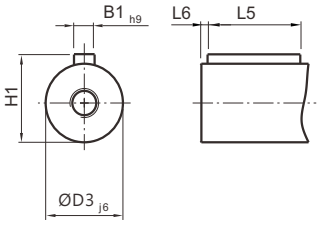

Shaft Option S2

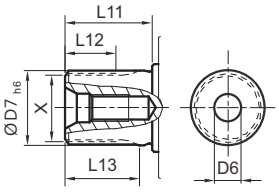

Shaft Option S3

AF060A / AF075A / AF100A / AF140A

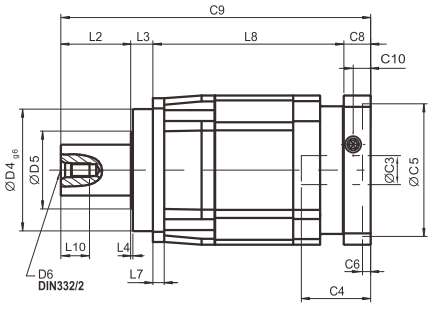

[unit: mm]

Dimension	AF042	AF060	AF060A	AF075	AF075A	AF100	AF100A	AF140	AF140A	AF180	AF220
D1	50	68		85		120		165		215	250
D2	3.4	5.5		6.8		9		11		13	17
D3 j6	13	16		22		32		40		55	75
D4 g6	35	60		70		90		130		160	180
D5	22	45		60		80		75		95	115
D6	M4x0.7P	M5 x 0.8P		M8 x 1.25P		M12 x 1.75P		M16 x 2P		M20x2.5P	M20x2.5P
D7	56	16		22		32		40		55	75
L1	42	62		76		105		142		180	220
L2	19.5	28.5		36		58		82		82	105
L3	6.5	20		20		30		30		30	33
L4	1	1.5		2		2		3		3	3
L5	16	25		32		40		63		70	90
L6	2	2		3		5		5		6	7
L7	4	6		7		10		12		15	20
L8	58.5	65.5	91.5	119.5	134.5	131	150.5	166.5	181.5	205.5	248
L9	42	60		90		115		142		180	220
L10	10	12.5		19		28		36		42	42
L11	-	26		26		26		40		41.5	52
L12	-	15		15		15		20		21.5	28
L13	-	21		22.5		23		33.5		33.5	45
C1[3]	46	46	70	70	100	100	130	130	165	165	215
C2[3]	M4x0.7P	M4x0.7P	M5 x 0.8P	M5 x 0.8P	M6 x 1P	M6 x 1P	M8x1.25P	M8x1.25P	M10x1.5P	M10x1.5P	M12x1.75P
C3[3]	≤11 / ≤12[4]	≤11 / ≤12[4]	≤14 / ≤16[4]	≤14 / ≤15.875 / ≤16[4]	≤19 / ≤24[4]	≤19 / ≤24[4]	≤32	≤32	≤38	≤38	≤48
C4[3]	25	25	34	34	40	40	50	50	60	60	85
C5[3]	30	30	50	50	80	80	110	110	130	130	180
C6[3]	3.5	3.5	8	8	4	4	5	5	6	6	6
C7[3]	42	42	60	60	90	90	115	115	142	142	190
C8[3]	29.5	29.5	19	19	17	17	19.5	19.5	22.5	22.5	29
C9[3]	114	143.5	159	194.5	207.5	207.5	258	298	316	340	415
C10[3]	8.75	8.75	13.5	13.5	10.75	10.75	13	13	15	15	20.75
B1 h9	5	5		6		10		12		16	20
H1	15	18		24.5		35		43		59	79.5
X DIN5480	-	W16x0.8x 30x18x6m		W22x1.25x 30x16x6m		W32x1.25x 30x24x6m		W40x2x 30x18x6m		W55x2x 30x26x6m	W70x2x 30x34x6m

3. C1~C10 are motor specific dimensions (metric std shown). Refer to www.apexdyna.com and Design Tool to view your specific motor mounting system.
4. AF042M1 offers C3 ≤ 12 option; AF060/A M1 offers C3 ≤ 12/16 option; AF075/A M1 offers C3 ≤ 16/24 option; AF075 M2 offers C3 ≤ 15.875 option. AF100M1 offers C3 ≤ 24 option.

Specifications / AFR Series

Gearbox Performance

Model No.		Stage	Ratio[1]	AFR042	AFR060	AFR060A	AFR075	AFR075A	AFR100	AFR100A	AFR140	AFR140A	AFR180	AFR220
Nominal Output Torque T_{2N}	Nm	1	3	9	36	–	90	–	195	–	342	–	588	1,140
			4	12	48	–	120	–	260	–	520	–	1,040	1,680
			5	15	60	–	150	–	325	–	650	–	1,200	2,000
			6	18	55	–	150	–	310	–	600	–	1,100	1,900
			7	19	50	–	140	–	300	–	550	–	1,100	1,800
			8	17	45	–	120	–	260	–	500	–	1,000	1,600
			9	14	40	–	100	–	230	–	450	–	900	1,500
			10	14	60	–	150	–	325	–	650	–	1,200	2,000
			12	–	55	–	150	–	310	–	600	–	1,100	1,900
			14	–	42	–	140	–	300	–	550	–	1,100	1,800
			16	–	45	–	120	–	260	–	500	–	1,000	1,600
			20	–	40	–	100	–	230	–	450	–	900	1,500
		2	12	12	–	–	–	–	–	–	–	–	–	–
			15	14	–	–	–	–	–	–	–	–	–	–
			16	15	–	–	–	–	–	–	–	–	–	–
			20	14	–	–	–	–	–	–	–	–	–	–
			25	15	60	60	150	150	325	325	650	650	1,200	2,000
			28	19	50	50	140	140	300	300	550	550	1,100	1,800
			30	20	55	55	150	150	310	310	600	600	1,100	1,900
			32	17	45	45	120	120	260	260	500	500	1,000	1,600
			35	19	50	50	140	140	300	300	550	550	1,100	1,800
			40	17	45	45	120	120	260	260	500	500	1,000	1,600
			45	14	40	40	100	100	230	230	450	450	900	1,500
			48	–	–	55	150	150	310	310	600	600	1,100	1,900
			50	14	60	60	150	150	325	325	650	650	1,200	2,000
			60	20	55	55	150	150	310	310	600	600	1,100	1,900
			64	–	–	45	120	120	260	260	500	500	1,000	1,600
			70	19	50	50	140	140	300	300	550	550	1,100	1,800
			80	17	45	45	120	120	260	260	500	500	1,000	1,600
			90	14	40	40	100	100	230	230	450	450	900	1,500
			100	14	40	60	150	150	325	325	650	650	1,200	2,000
			120	–	–	55	150	150	310	310	600	600	1,100	1,900
			140	–	–	50	140	140	300	300	550	550	1,100	1,800
			160	–	–	45	120	120	260	260	550	550	1,000	1,600
			180	–	–	40	100	100	230	230	450	450	900	1,500
			200	–	–	40	100	100	230	230	450	450	900	1,500
Emergency Stop Torque T_{2NOT}[2]	Nm	1,2	3~200	3 times of Nominal Output Torque										
Nominal Input Speed n_{1N}	rpm	1,2	3~200	5,000	5,000	5,000	4,000	4,000	4,000	4,000	3,000	3,000	3,000	2,000
Max. Input Speed n_{1B}	rpm	1,2	3~200	10,000	10,000	10,000	8,000	8,000	8,000	8,000	6,000	6,000	6,000	4,000
Micro Backlash P0	arcmin	1	3~20	–	–	–	≤2	–	≤2	–	≤2	–	≤2	≤2
		2	12~200	–	–	–	≤4	≤4	≤4	≤4	≤4	≤4	≤4	≤4
Reduced Backlash P1	arcmin	1	3~20	≤4	≤4	–	≤4	–	≤4	–	≤4	–	≤4	≤4
		2	12~200	≤7	≤7	≤7	≤7	≤7	≤7	≤7	≤7	≤7	≤7	≤7
Standard Backlash P2	arcmin	1	3~20	≤6	≤6	–	≤6	–	≤6	–	≤6	–	≤6	≤6
		2	12~200	≤9	≤9	≤9	≤9	≤9	≤9	≤9	≤9	≤9	≤9	≤9
Torsional Rigidity	Nm/arcmin	1,2	3~200	3	7	7	14	14	25	25	50	50	145	225
Max. Radial Load F_{2rB}[3]	N	1,2	3~200	610	1,400	1,400	4,100	4,100	9,200	9,200	14,000	14,000	18,000	33,000
Max. Axial Load F_{2aB}[3]	N	1,2	3~200	320	1,100	1,100	3,700	3,700	5,800	5,800	11,400	11,400	19,500	16,300
Max. Tilting Moment M_{2K}	Nm		3~200	20	85	85	380	380	970	970	1,840	1,840	2,740	5,030
Efficiency η	%	1	3~20	≥95%										
		2	12~200	≥92%										
Weight	kg	1	3~20	0.9	2.1	–	6.4	–	11.3	–	22.5	–	44	77
		2	12~200	1.2	1.9	2.8	4.8	8	10.6	15.1	21	29.2	41	75
Operating Temp	°C	1,2	3~200	-10°C~+90°C										
Lubrication		1,2	3~200	Synthetic lubrication oils										
Degree of Gearbox Protection		1,2	3~200	IP65										
Mounting Position		1,2	3~200	all directions										
Noise[4]	dB(A)	1,2	3~200	≤61	≤63	≤65	≤65	≤68	≤68	≤70	≤70	≤72	≤72	≤74

(1) Ratio ($i=N_{in} / N_{out}$)
(2) Max. acceleration torque T_{2B} = 60% of T_{2NOT}
(3) Applied to the output shaft center at 100 rpm
(4) The dB values are measured by gearbox with ratio 10 (1-stage) or ratio 100 (2-stage), no loading at 3,000 RPM or at the respective Nominal Input Speed by bigger model size.
By lower ratio and/or higher RPM, the noise level could be 3 to 5 dB higher.

Gearbox Inertia

Model No.		Stage	Ratio	AFR042	AFR060	AFR060A	AFR075	AFR075A	AFR100	AFR100A	AFR140	AFR140A	AFR180	AFR220
Mass Moments of Inertia J_1	kg・cm^2	1	3~10	0.09	0.35	–	2.25	–	6.84	–	23.4	–	68.9	135.4
			12~20	–	0.07	–	1.87	–	6.25	–	21.8	–	65.6	119.8
		2	12~20	0.09	–	–	–	–	–	–	–	–	–	–
			25~90	0.09	0.09	0.35	0.35	2.25	2.25	6.84	6.84	23.4	23.4	68.9
			48, 64	–	–	0.07	0.31	1.87	1.87	6.25	6.25	21.8	21.8	65.6
			100~200	–	–	0.07	0.31	1.87	1.87	6.25	6.25	21.8	21.8	65.6

Dimensions (1-stage, Ratio i=3~20) / AFR Series

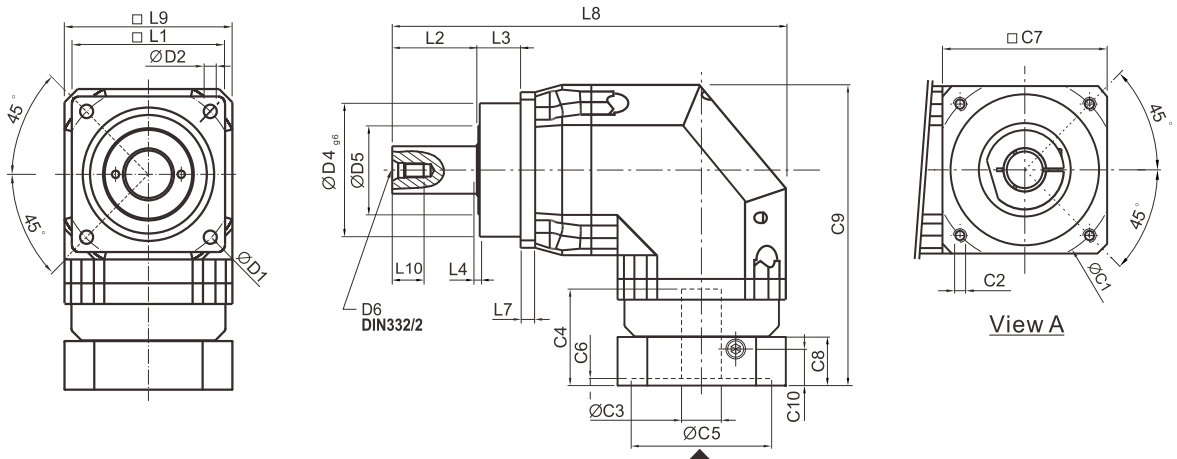

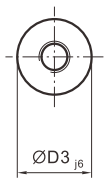

Shaft Option S1

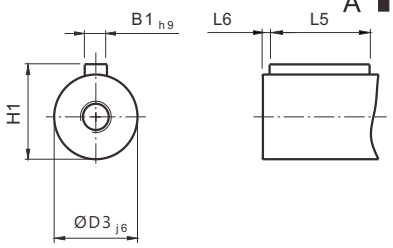

Shaft Option S2

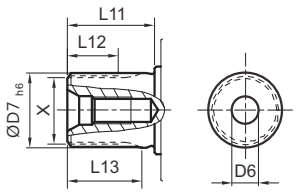

Shaft Option S3

[unit: mm]

Dimension	AFR042	AFR060	AFR075	AFR100	AFR140	AFR180	AFR220
D1	50	68	85	120	165	215	250
D2	3.4	5.5	6.8	9	11	13	17
D3 j6	13	16	22	32	40	55	75
D4 g6	35	60	70	90	130	160	180
D5	22	45	60	80	75	95	115
D6	M4 x 0.7P	M5 x 0.8P	M8 x 1.25P	M12 x 1.75P	M16 x 2P	M20 x 2.5P	M20 x 2.5P
D7 h6	-	16	22	32	40	55	75
L1	42	62	76	105	142	180	220
L2	19.5	28.5	36	58	82	82	105
L3	6.5	20	20	30	30	30	33
L4	1	1.5	2	2	3	3	3
L5	16	25	32	40	63	70	90
L6	2	2	3	5	5	6	7
L7	4	6	7	10	12	15	20
L8	111.5	150	219	269.5	338.5	397	484
L9	42	60	90	115	142	180	220
L10	10	12.5	19	28	36	42	42
L11	-	26	26	26	40	41.5	52
L12	-	15	15	15	20	21.5	28
L13	-	21	22.5	23	33.5	33.5	45
C1[1]	46	70	100	130	165	215	235
C2[1]	M4 x 0.7P	M5 x 0.8P	M6 x 1P	M8 x 1.25P	M10 x 1.5P	M12 x 1.75P	M12 x 1.75P
C3[1]	≤11 / ≤12[2]	≤14 / ≤16[2]	≤19 / ≤ 24[2]	≤32	≤38	≤48	≤55
C4[1]	25	34	40	50	60	85	116
C5[1]	30	50	80	110	130	180	200
C6[1]	3.5	8	4	5	6	6	6
C7[1]	42	60	90	115	142	190	220
C8[1]	29.5	19	17	19.5	22.5	29	63
C9[1]	90.5	111.5	152.5	191.5	235.5	303.5	378.5
C10[1]	8.75	13.5	10.75	13	15	20.75	53
B1 h9	5	5	6	10	12	16	20
H1	15	18	24.5	35	43	59	79.5
X DIN5480	-	W16x0.8x 30x18x6m	W22x1.25x 30x16x6m	W32x1.25x 30x24x6m	W40x2x 30x18x6m	W55x2x 30x26x6m	W70x2x 30x34x6m

1. C1~C10 are motor specific dimensions (metric std shown). Refer to www.apexdyna.com and Design Tool to view your specific motor mounting system.
2. AFR042M1 offers C3 ≤ 12 option; AFR060M1 offers C3 ≤ 16 option; AFR075M1 offers C3 ≤ 24 option.

Dimensions (2-stage, Ratio i=12~200) / AFR Series

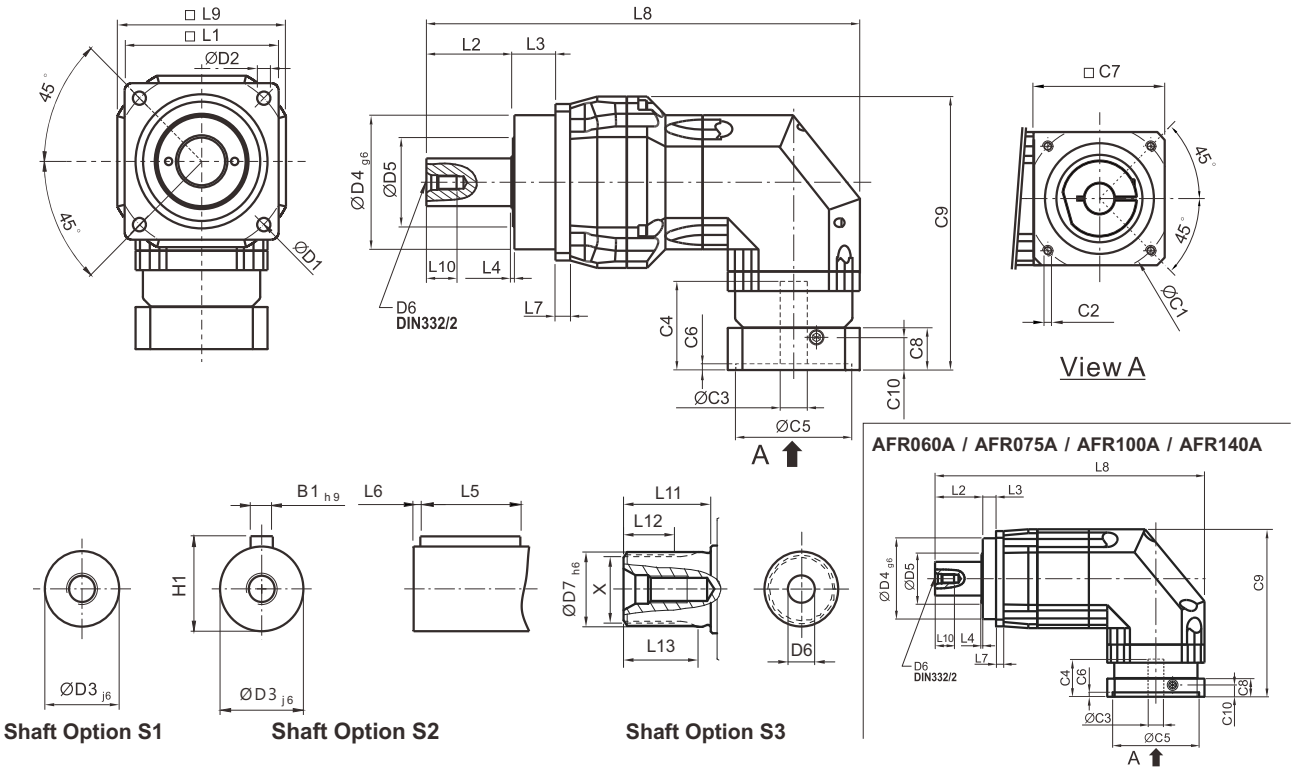

[unit: mm]

Dimension	AFR042	AFR060	AFR060A	AFR075	AFR075A	AFR100	AFR100A	AFR140	AFR140A	AFR180	AFR220
D1	50	68		85		120		165		215	250
D2	3.4	5.5		6.8		9		11		13	17
D3 j6	13	16		22		32		40		55	75
D4 g6	35	60		70		90		130		160	180
D5	22	45		60		80		75		95	115
D6	M4x0.7P	M5 x 0.8P		M8 x 1.25P		M12 x 1.75P		M16 x 2P		M20x2.5P	M20x2.5P
D7	-	16		22		32		40		55	75
L1	42	62		76		105		142		180	220
L2	19.5	28.5		36		58		82		82	105
L3	6.5	20		20		30		30		30	33
L4	1	1.5		2		2		3		3	3
L5	16	25		32		40		63		70	90
L6	2	2		3		5		5		6	7
L7	4	6		7		10		12		15	20
L8	139	168.5	187	222.5	267	295.5	330.5	370.5	410	434	521
L9	42	60		90		115		142		180	220
L10	10	12.5		19		28		36		42	42
L11	-	26		26		26		40		41.5	52
L12	-	15		15		15		20		21.5	28
L13	-	21		22.5		23		33.5		33.5	45
C1[3]	46	46	70	70	100	100	130	130	165	165	215
C2[3]	M4x0.7P	M4x0.7P	M5 x 0.8P	M5 x 0.8P	M6 x 1P	M6 x 1P	M8x1.25P	M8x1.25P	M10x1.5P	M10x1.5P	M12x1.75P
C3[3]	≤11 / ≤12[4]	≤11 / ≤12[4]	≤14 / ≤16[4]	≤14 / ≤15.875 / ≤16[4]	≤19 / ≤24[4]	≤19 / ≤24[4]	≤32	≤32	≤38	≤38	≤48
C4[3]	25	25	34	34	40	40	50	50	60	60	85
C5[3]	30	30	50	50	80	80	110	110	130	130	180
C6[3]	3.5	3.5	8	8	4	4	5	5	6	6	6
C7[3]	42	42	60	60	90	90	115	115	142	142	190
C8[3]	29.5	29.5	19	19	17	17	19.5	19.5	22.5	22.5	29
C9[3]	90.5	99.5	111.5	126.5	152.5	165	191.5	205	235.5	254.5	323.5
C10[3]	8.75	8.75	13.5	13.5	10.75	10.75	13	13	15	15	20.75
B1 h9	5	5		6		10		12		16	20
H1	15	18		24.5		35		43		59	79.5
X DIN5480	-	W16x0.8x 30x18x6m		W22x1.25x 30x16x6m		W32x1.25x 30x24x6m		W40x2x 30x18x6m		W55x2x 30x26x6m	W70x2x 30x34x6m

3. C1~C10 are motor specific dimensions (metric std shown). Refer to www.apexdyna.com and Design Tool to view your specific motor mounting system.
4. AFR042M1 offers C3 ≤ 12 option; AFR060/A M1 offers C3 ≤ 12/16 option; AFR075/A M1 offers C3 ≤ 16/24 option; AFR075 M2 offers C3 ≤ 15.875. AFR100M1 offers C3 ≤ 24 option.

Selection of the Optimum Gearbox

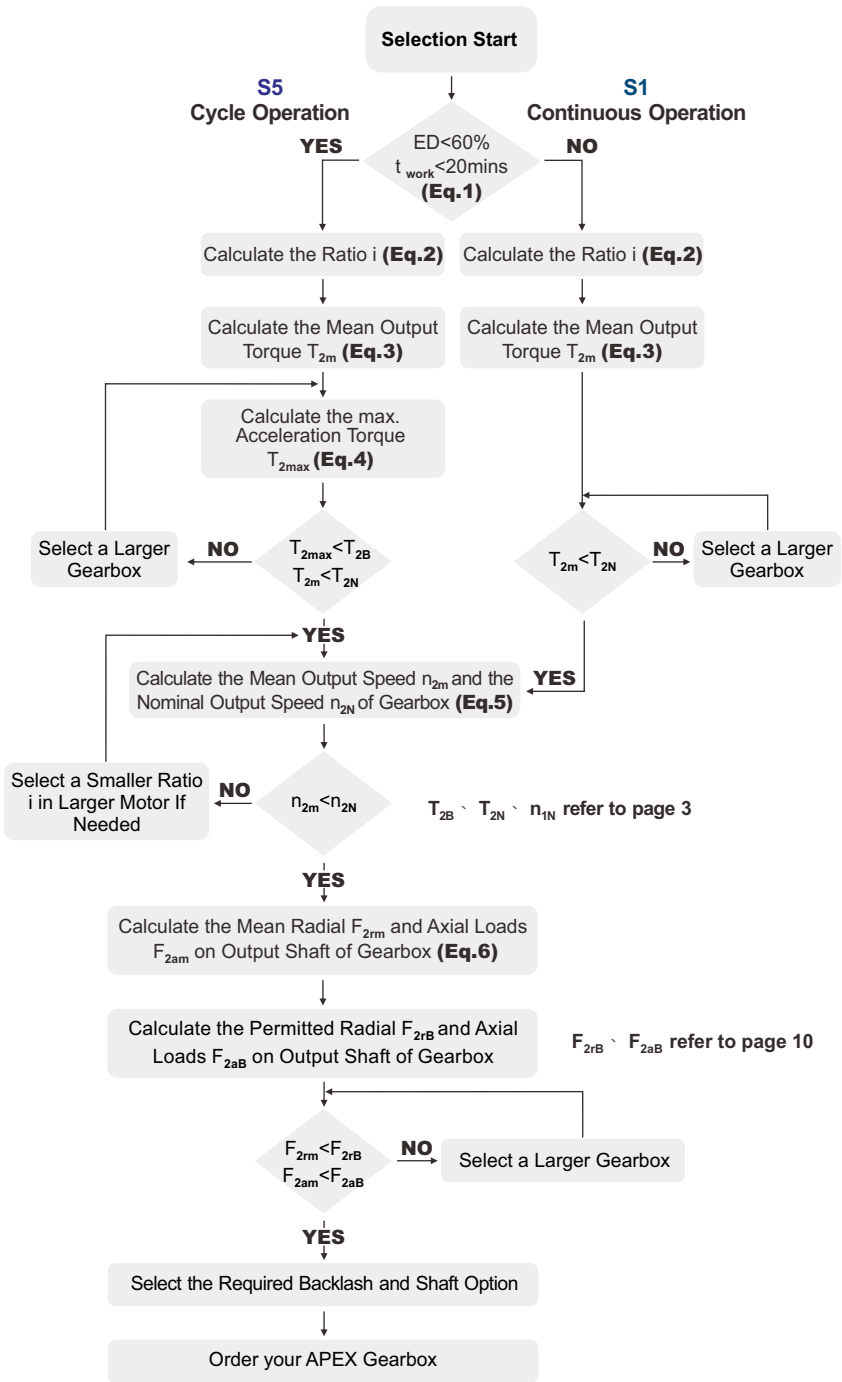

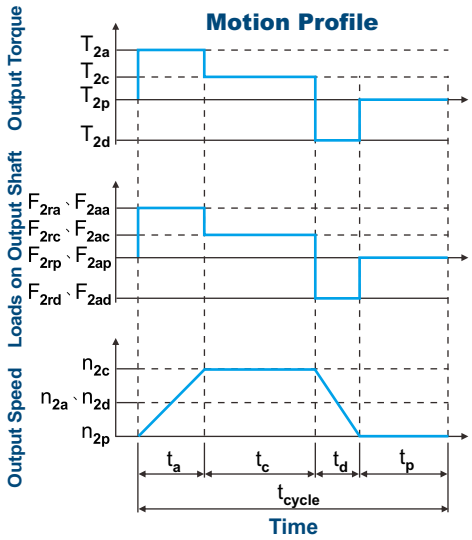

1. $ED = \frac{t_a + t_c + t_d}{t_{cycle}} \times 100\%$, $t_{work} = t_a + t_c + t_d$

Index : a. Acceleration, c. Constant,
d. Deceleration, p. Pause **(Eq.1)**

2. $i \cong \frac{n_m}{n_{work}}$

n_m Output Speed of the Motor

n_{work} Working Speed **(Eq.2)**

3. $T_{2m} = \sqrt[3]{\frac{n_{2a} \times t_a \times T_{2a}^3 + n_{2c} \times t_c \times T_{2c}^3 + n_{2d} \times t_d \times T_{2d}^3}{n_{2a} \times t_a + n_{2c} \times t_c + n_{2d} \times t_d}}$

(Eq.3)

4. $T_{2max} = T_{mB} \times i \times k_s \times \eta$

where K_s is

K_s	No. of Cycles / hr
1.0	0 ~ 1,000
1.1	1,000 ~ 1,500
1.3	1,500 ~ 2,000
1.6	2,000 ~ 3,000
1.8	3,000 ~ 5,000

T_{mB} Max. Output Torque of the Motor

η Efficiency of the Gearbox **(Eq.4)**

5. $n_{2a} = n_{2d} = \frac{1}{2} \times n_{2c}$

$n_{2m} = \frac{n_{2a} \times t_a + n_{2c} \times t_c + n_{2d} \times t_d}{t_a + t_c + t_d}$

$n_{2N} = \frac{n_{1N}}{i}$ **(Eq.5)**

6. $F_{2rm} = \sqrt[3]{\frac{n_{2a} \times t_a \times F_{2ra}^3 + n_{2c} \times t_c \times F_{2rc}^3 + n_{2d} \times t_d \times F_{2rd}^3}{n_{2a} \times t_a + n_{2c} \times t_c + n_{2d} \times t_d}}$

$F_{2am} = \sqrt[3]{\frac{n_{2a} \times t_a \times F_{2aa}^3 + n_{2c} \times t_c \times F_{2ac}^3 + n_{2d} \times t_d \times F_{2ad}^3}{n_{2a} \times t_a + n_{2c} \times t_c + n_{2d} \times t_d}}$ **(Eq.6)**

Recommended (for S5 Cycle Operation)

The general design is given for

$\frac{J_L}{i^2} \leq 4 \times J_m$

The optimal design is given for

$\frac{J_L}{i^2} \cong J_m$

J_L Load Inertia

J_m Motor Inertia

Permitted Radial and Axial Loads

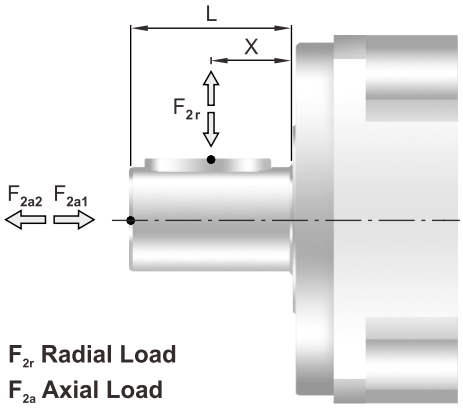

F_{2r} Radial Load
F_{2a} Axial Load

The permitted radial and axial loads on output shaft of the gearbox depend on the design of the gearbox supporting bearings.
APEX use the extension straddle oversized ball bearing design.
It can take heavy load from both axes.

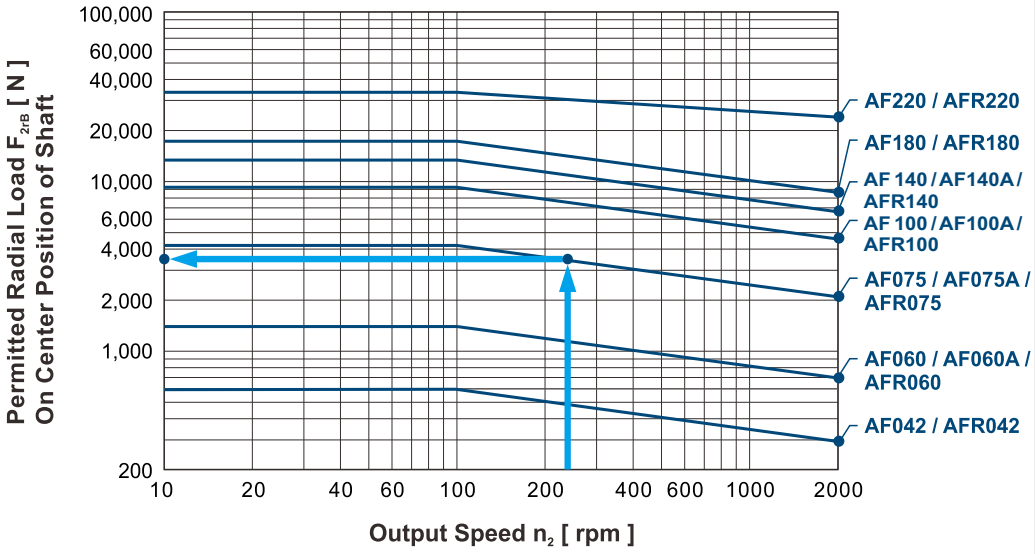

If radial force F_{2r} is exerted on the center of the output shaft X=1/2 x L.
The permitted radial load is given on left diagram.

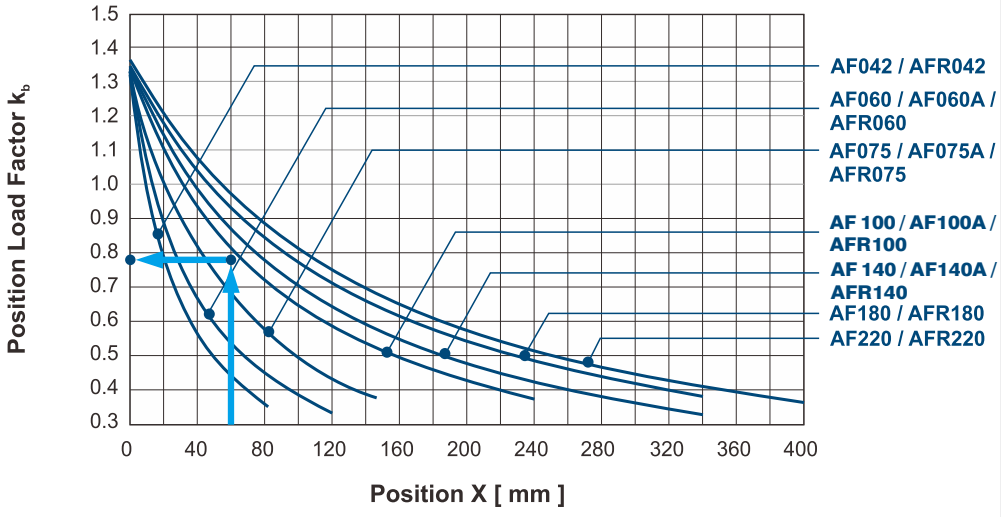

If radial force F_{2r} is not exerted on the center of the output shaft X<1/2 x L or X>1/2 x L
The permitted radial and axial loads can be calculated by the position load factor K_b on the left diagram.

Note

Note

APEX TAIWAN NORTH
ANDTEK AUTOMATION CO.,LTD
TEL +886-02-82262655
13F-5, No.2, Jian 8th Rd., Jhonghe Dist., New Taipei City 235, TAIWAN
sales@andtek.com.tw
www.apexdyna.com

APEX TAIWAN CENTRAL
ANDTEK AUTOMATION CO.,LTD
TEL +886-04-23594286
9F-6, No.925, Sec.4, Taiwan Blvd., Xitun Dist.
Taichung City 407 TAIWAN
sales@andtek.com.tw
www.apexdyna.com

APEX TAIWAN SOUTH
MEN JENN ELECTRIC CO., LTD.
TEL +886-06-2337332 ~ 6
No.774, Zhonghua Rd., Yongkang Dist., Tainan City 710, TAIWAN
menjenn@ms24.hinet.net
www.apexdyna.com

APEX DYNAMICS INC. SHANGHAI
TEL +86-21-69220577
No.128 ZHUYING Road QINGPU Industry Area, Shanghai, CHINA
sales@apexdyna.cn
www.apexdyna.cn

APEX DYNAMICS SHENZHEN, LTD.
TEL +86-755-84516325
No. 1102A of D area , CFG mansion ,Bao Yuan Road , Bao' an District , Shenzhen ,CHINA.
sales@szapexdyna.com
www.szapexdyna.com

APEX DYNAMICS BEIJING, LTD.
TEL +86-10-69570691
NO.1,YaoPingRoad,SongZhuang Town, Tongzhou istrict, Beijing, CHINA.
bjapexdyna@163.com
www.bjapex.cn

CHONGQING APEX DYNAMICS CO., LTD.
TEL +86-23-67686860
406, Building 5, No.68,Jinyu Avenue, Beibu New Area, Chongqing, CHINA
sales@cqapexdyna.com
www.apexdyna.com

APEX (XIAMEN) DYNAMICS TECHNOLOGY CO., LTD.
TEL +86-0592-720-5279
Unit B-3,1F.,No.129,Jingquan Road, Jimei District, Xiamen, Fujian, CHINA
sales@xmapexdyna.com
www.xmapexdyna.com

APEX DYNAMICS USA, INC.
TEL +1-631-2449040
885 Marconi Avenue Ronkonkoma, NY 11779
U.S.A.
sales@apexdynamicsusa.com
www.apexdynamicsusa.com

APEX DYNAMICS KOREA
TEL +82-31-8179992
1246-32, Seongsuk-dong, Ilsandong-gu, Goyang-city, Gyeonggi-Do, KOREA (R.O.K) 410-570
sales@apexdynakorea.co.kr
www.apexdynakorea.co.kr

APEX DYNAMICS JAPAN
TEL +88-092-4511202
1-3-46, Hanmichibasi, Hakata-ku, Fukuoka, 812-0897, JAPAN
sales@apexdyna.jp
www.apexdyna.jp

APEX DYNAMICS SINGAPORE PTE LTD
TEL +65-62-626228
3 South Buona Vista Road, #05-15 & #06-15. SINGAPORE 118136
sales@apexdyna.com.sg
www.apexdyna.com.sg

APEX DYNAMICS (THAILAND) CO., LTD.
TEL +66-2-3266233
73 Soi Ladkrabang 30, Kadkrabang Rd.,Bangkok 10520, THAILAND
sales@apexdyna.co.th
www.apexdyna.co.th

APEX DYNAMICS BV
TEL +31-492-509995
Churchilllaan 101 5705 BK Helmond, NETHERLANDS
sales@apexdyna.nl
www.apexdyna.nl
www.apexdyna.be

APEX DYNAMICS
POLSKA SP. Z O.O.
TEL +48-12-6304728
Krakowska 50, 32-083 Balice, POLAND
sales@apexdyna.pl
www.apexdyna.pl

APEX DYNAMICS SPAIN, S.L.
TEL +34-93-6562990
Poligono Industrial Molí dels Frares, Calle C nº 12,08620 - Sant Vicenç dels Horts, Barcelona, SPAIN
apexdyna@apexdyna.es
www.apexdyna.es

LIMAN TRADING LIMITED FZC LLC
P.O. Box 97 , Postal Code 322, Corporate Parks, Sohar Free Zoon, Oman

APEKS REDUKTOR VE DISLI SAN. TIC. LTD. STI.
TEL +90-232-4589960
10042 Sok.No:10 AOSB Çiğli-İzmir, TURKEY
sales@apexdyna.com.tr
www.apexdyna.com.tr

APEX DYNAMICS AUSTRALIA PTY LTD.
TEL +613-95-852739
36 Taunton Drive, Cheltenham, Victoria 3192 AUSTRALIA.
sales@apexdyna.com.au
www.apexdyna.com.au

APEX DYNAMICS (I) JV
TEL +91-80-55345541
GAT NO. 279, KHED SHIVAPUR BAUG, TALUKA HAVELI PUNE- 412205 INDIA.
sales@apexdyna.co.in
www.apexdyna.co.in

APEX DYNAMICS FRANCE SAS
TEL +33-160-135097
11 - Burospace F - 91570 - Bièvres, FRANCE
info@apexdyna.fr
www.apexdyna.fr

APEX DYNAMICS SWEDEN AB
TEL +46-75-2424444
Fredrikbergsgatan 2 SE-573 92 Tranås, SWEDEN
sales@apexdyna.se
www.apexdyna.se

PT.APEX DYNAMICS INDONESIA
TEL +62 21 2928 3681
Rukan Aralia Blok HY43 no.11, Harapan Indah II, Bekasi - Jawa Barat, INDONESIA 17214
sales@apexdyna.co.id
www.apexdyna.co.id

APEX DYNAMICS GERMANY GMBH
TEL +49-7181-9329955
Spanninger Str. 9, 73650 Winterbach, GERMANY
Langer@apexdynamics.de
www.apexdynamics.de

APEX DYNAMICS CZECH S.R.O.
TEL +420-577-663877
tř. Tomáše Bati 1851 765 02 Otrokovice ČESKÁ REPUBLIKA
info@apexdynaczech.cz
www.apexdynaczech.cz

APEX DYNAMICS РОССИЯ
TEL +7-495-2255452
+7-495-6462422
г.Москва, ул. Южнопортовая, дом 7, строение "С", 3-й этаж
info@apexdynarussia.ru
www.apexdynarussia.ru

APEX DYNAMICS UK
TEL +44-0121-737-1170
Heath House, Cheadle Rd, Uttoxeter, ST14 7BY, UK
mikeg@apexdynauk.com
www.apexdynauk.com

APEX DYNAMICS SWITZERLAND AG
TEL +41-55-4517020 Talstrasse 24, CH-8852 Altendorf, SWITZERLAND
info@apexdyna.ch
www.apexdyna.ch

APEX DYNAMICS MOTION SDN BHD
TEL +60 7237 1055
No.1, Jalan Perniagaan Setia 3, Taman Perniagaan Setia, 81100 Johor Bahru, Johor, MALAYSIA (Setia Business Park 2 @ Iskandar Malaysia)
sales@apexdyna.com.sg
www.apexdyna.com.sg

APEX DYNAMICS BRAZIL
TEL +55-47-30298700
Rua Senador Petrônio Portela, 47 - Bloco 5, Zona Industrial Norte - CEP 89218-575 - Joinville (SC)
lucan@neoyama.com.br
adriano.duarte@neoyama.com.br
www.neoyama.com.br

APEX DYNAMICS ITALY
TEL +39 02.36634521
VIA E. DE AMICIS, 2 – 20091 BRESSO (MI)
info@apexdynamics.it
www.apexdynamics.it

Apex Dynamics Austria GmbH
TEL +43 07207884160
Dr. Hans-Lechner-Strasse 6, 5071 Wals-Siezenheim
info@apexdynamics.at
www.apexdynamics.at

UAB "APEXO DINAMIKA"
TEL +370 52078165
Medaus g. 28A,
Medininku k., Vilniaus r. Sav.
LT-13192
info@apexdyna.lt

APEX DYNAMICS DENMARK
TEL +45 73121260
Grundtvigs Allé 165, 6400
Sønderborg, Denmark
sales@apexdyna.dk
www.apexdyna.dk

APEX DYNAMICS, INC.

No. 10, Keyuan 3rd Rd., Situn District, Taichung City 40763, Taiwan (R.O.C.)
Tel:886-4-24650219 | Fax:886-4-24650118
sales@apexdyna.com | http://www.apexdyna.com

APEX-2019-04-AF/AFR Series - 1.0V
Printed in Taiwan