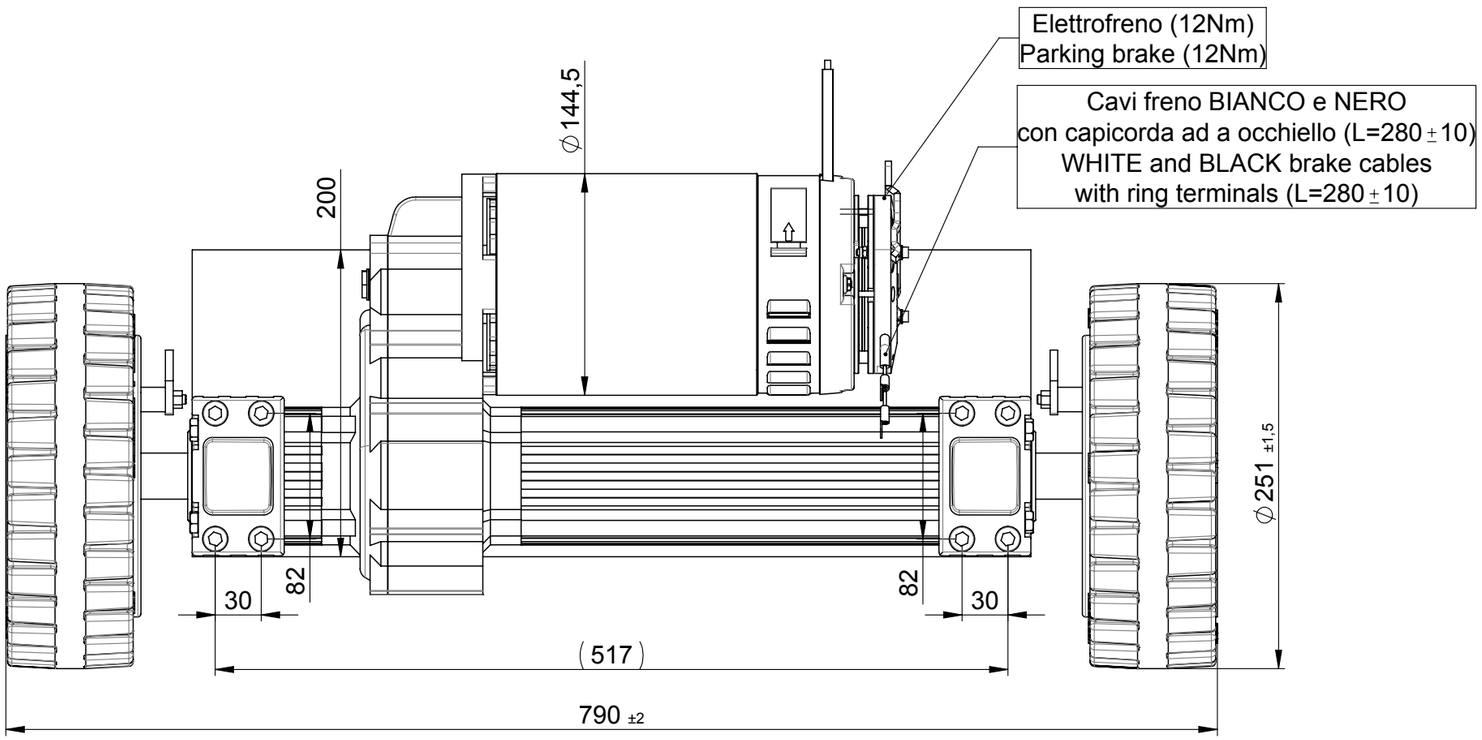

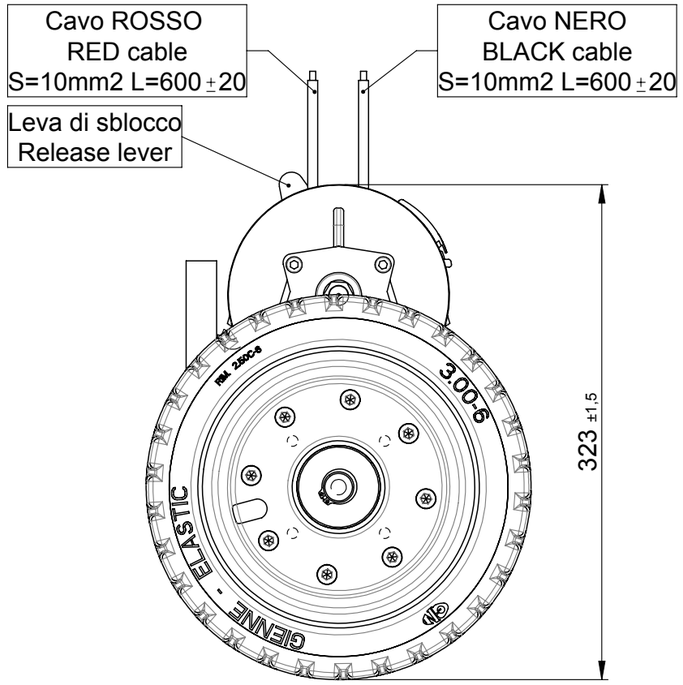

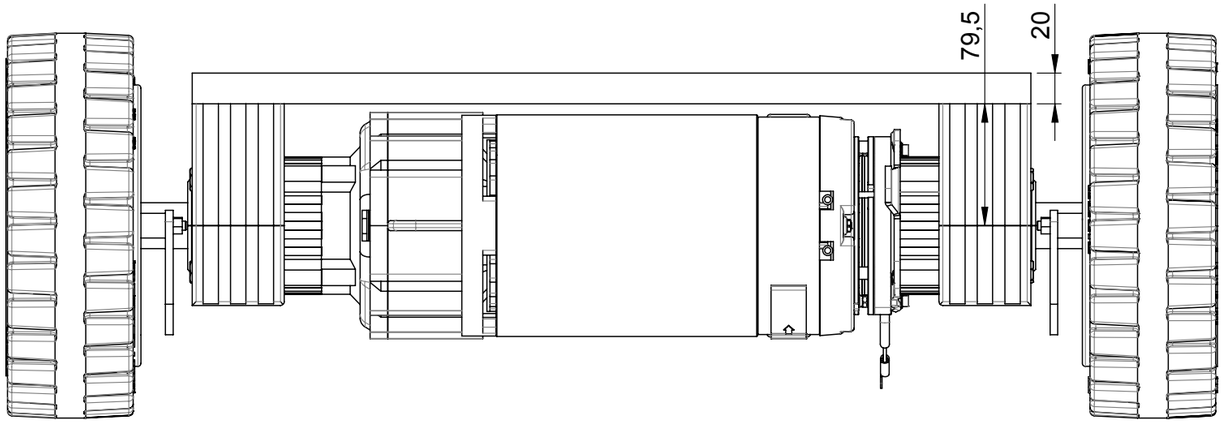

SCHEMA ELETTRICO MOTORE/MOTOR WIRING DIAGRAM

	Rotazione/Rotation	
	Sx/CCW	Dx/CW
+	rosso/red	nero/black
-	nero/black	rosso/red

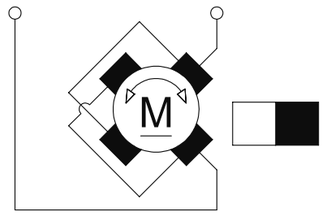

Firma/Signature		Data/Date
Dis./Drawn	**Pasquale**	**05/10/12**
Ver./Checked		
Appr./Approved		

MODIFICHE/CHANGES

Rev.	Rif./Ref.	Firma/Signature	Data/Date
6			
5			
4			
3			
2			
1			

Scala/Scale 1:4

Formato/Size A3

Metric format: unless otherwise specified, dimensions are in millimeters, dimensions between [ ] are in inches

Unless otherwise specified tolerances references: UNI EN 22768/1 m - UNI EN 22768/2 K

LINEAR LENGHTS					ISO METRIC THREADS		ANGLES
...6	>6 ...30	>30 ...120	>120 ...400	>400			±1°
±0.1	±0.2	±0.3	±0.5	±0.8	Male	6g	HOLES
					Female	7H	±0.1

amer

Motori, motoriduttori e sistemi di trazione a cc
DC motors, gearmotors and traction systems

Materiale/Material

Trattamento/Treatment

Stampo/Mould
L175

Denominazione/Title
MRP8DS IP20
24V 1100W 200rpm

Codice/Code DCM-2413

This document is proprietary to Amer S.p.A. and shall not be used or disclosed to others without the written autorization of Amer S.p.A.