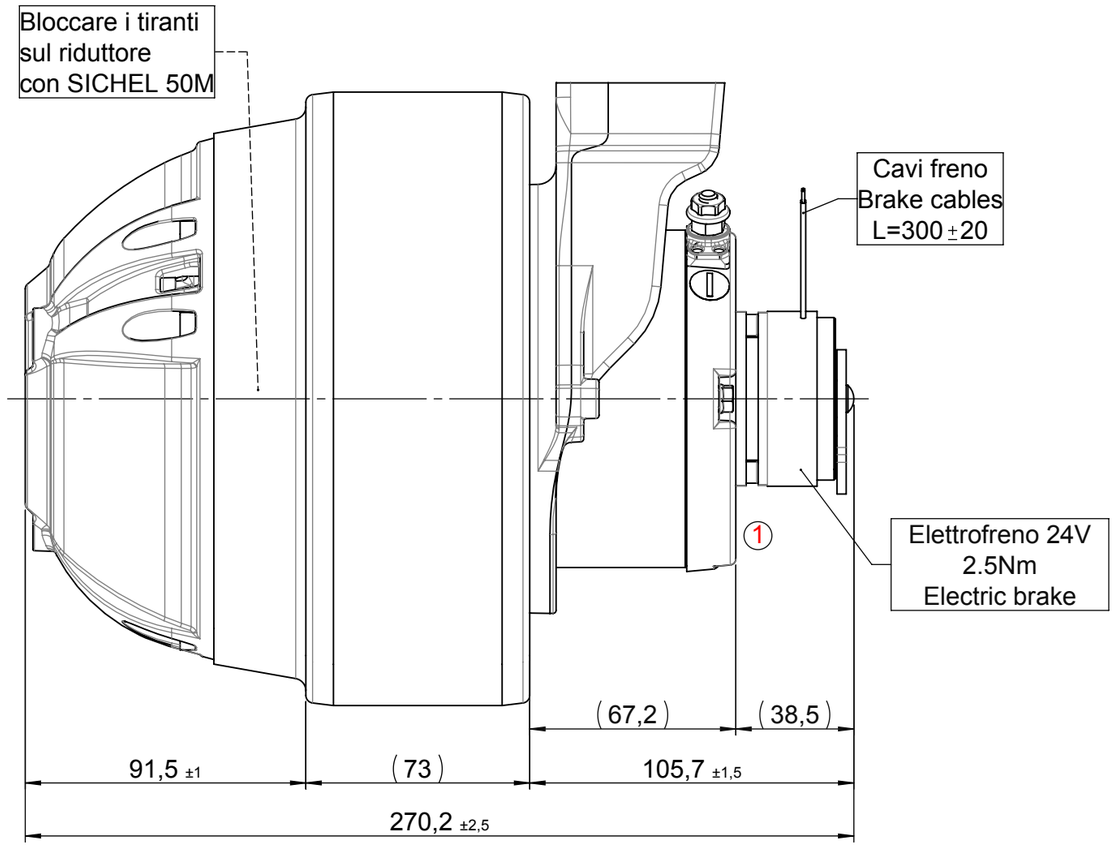

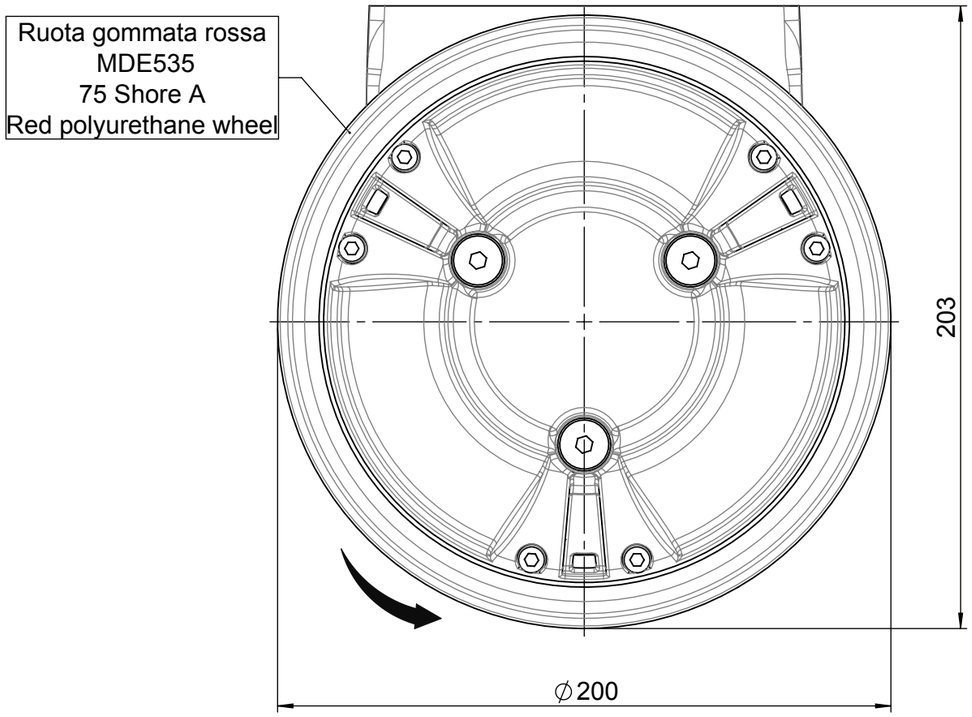

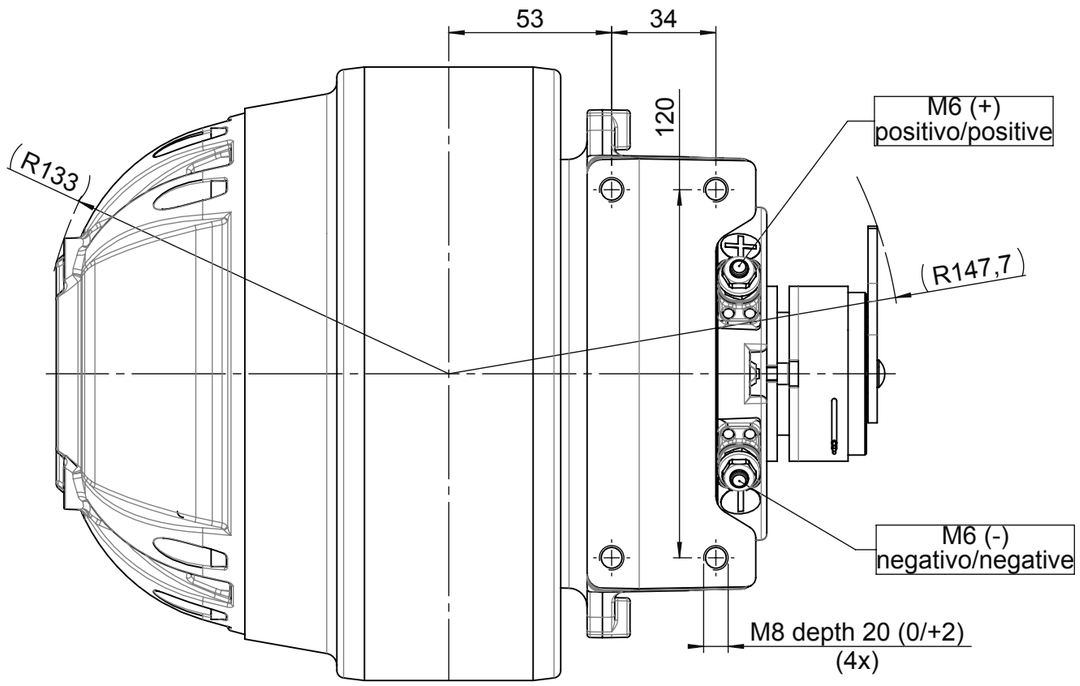

amer CE

Motori e Motoriduttori a CC - Valdagno (VI) ITALY

Type: MTRMP11	Code: 6962273E
Watt: 400	km/h: 6
V DC: 24	A: 20 F.F.: 1
Duty: S1	Ins. class: F IP: 44
GEARBOX OIL ISO 150 PAO	
Date: XX/XX/XXXX	S/N: XXXXXXXX

MADE IN ITALY
Warranty void if removed

SCHEMA ELETTRICO MOTORE
MOTOR WIRING DIAGRAM

	Rotazione/Rotation	
	Sx/CCW	Dx/CW
+	positive	negative
−	negative	positive

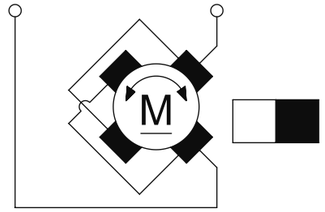

Note:
1)cassa ∅110x130
2)anello di compensazione ∅42 sp.0.35 lato riduttore

Firma/Signature		Data/Date
Disegnato Drawn	GONZO	09/06/2016
Modificato Modified	GONZO	29/06/2016
Verificato Checked	DALLA COSTA	13/09/2016
Approvato Approved	DALLA COSTA	13/09/2016

Scala/Scale 1:2 — Formato/Size A3

Metric format: unless otherwise specified, dimensions are in millimeters, dimensions between [ ] are in inches

Unless otherwise specified tolerances references: UNI EN 22768/1 m - UNI EN 22768/2 K

LINEAR LENGHTS

...6	>6 ...30	>30 ...120	>120 ...400	>400 ...1000	>1000 ...2000
±0.1	±0.2	±0.3	±0.5	±0.8	±1.2

ISO METRIC THREADS Male 6g Female 6H

ANGLES ±1° — HOLES ±0.1

Materiale/Material

Trattamento/Treatment

Note/Notes

Denominazione/Title
MTRMP11 200 24V 400W 6km/h

Codice/Code 6962273E — Rev. 1 — Rif./Ref. 8153

amer
Motori, motoriduttori e sistemi di trazione a cc
DC motors, gearmotors and traction systems
AMER SpA
I-36078 Valdagno (Vicenza) - Italy
Via Maestri del Lavoro, 1
Ph. +39 0445 400200
www.amer.it

This document is proprietary to Amer S.p.A. and shall not be used or disclosed to others without the written autorization of Amer S.p.A.