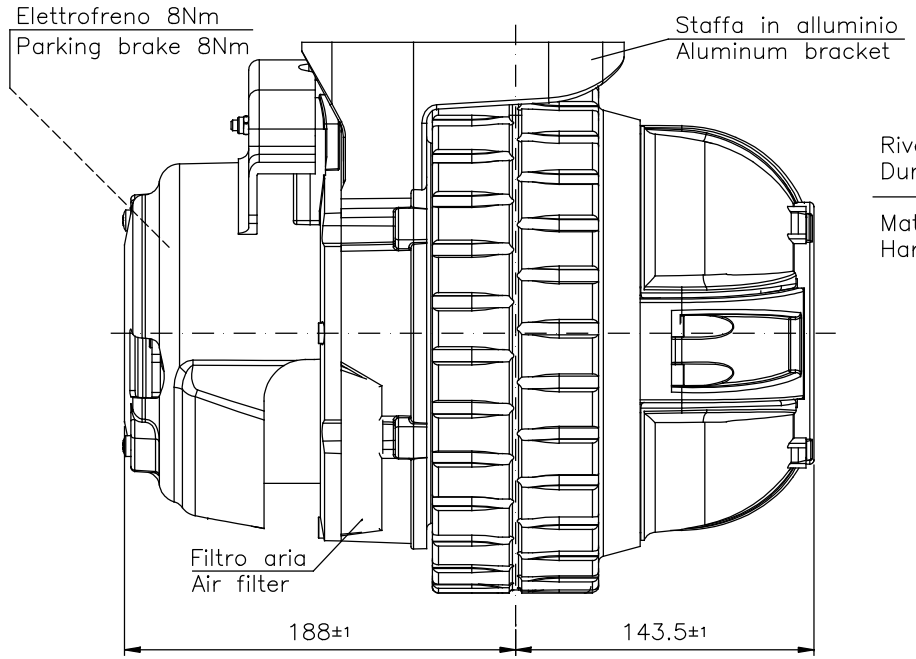

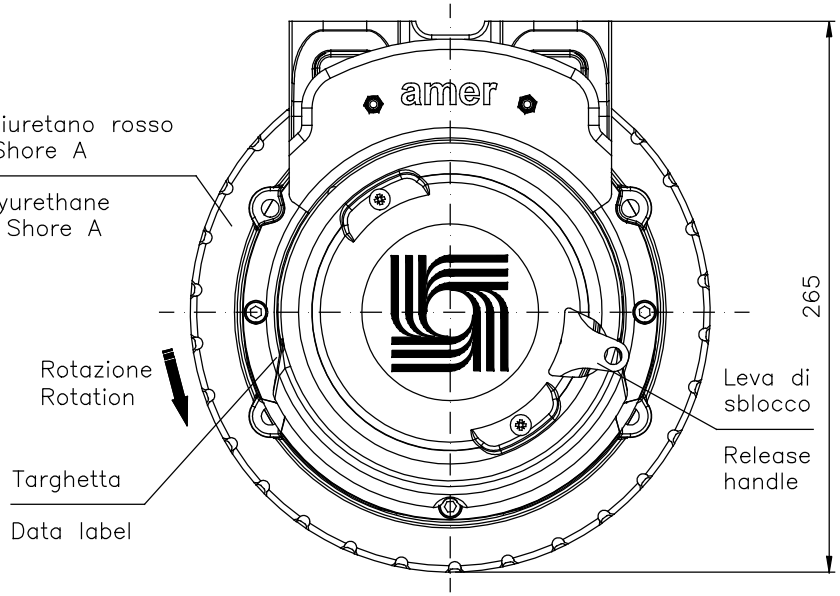

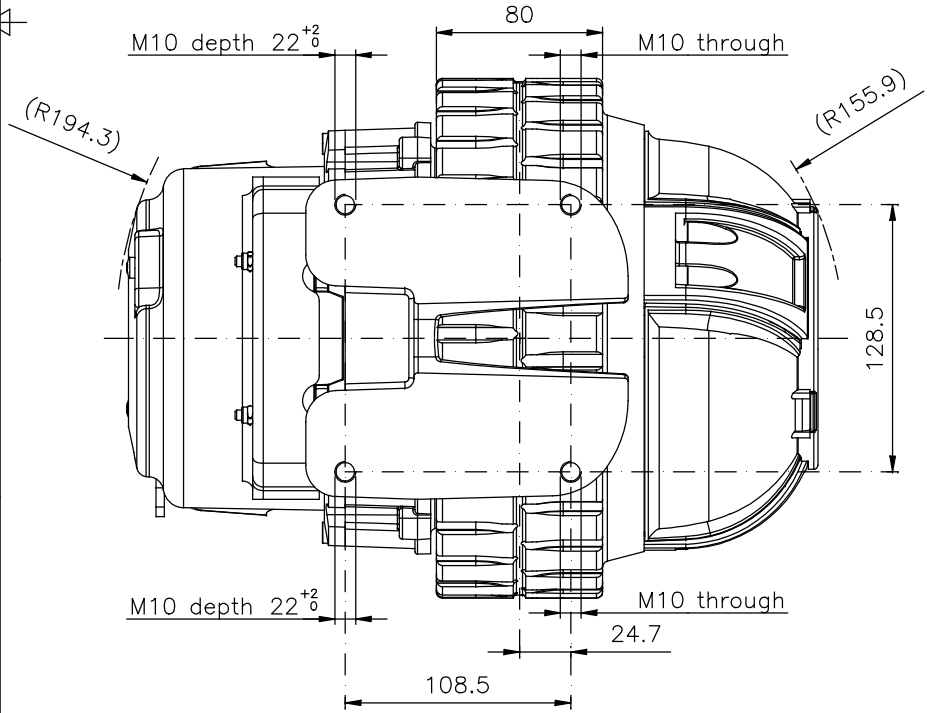

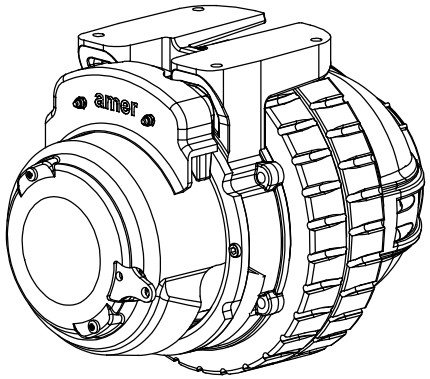

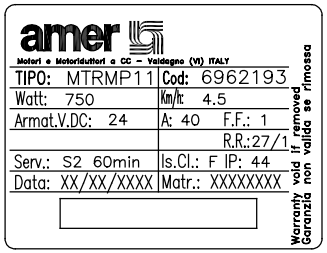

Firma/Signature		Data/Date	Scala/Scale	Formato/Size	Materiale/Material
Dis./Drawn	Gonzo	27/11/12	1:2.5	A3	
Ver./Checked	Dalla Costa	15/01/13			Trattamento/Treatment
Appr./Approved	Dalla Costa	15/01/13			

Metric format: unless otherwise specified, dimensions are in millimeters; dimensions between [ ] are in inches

Unless otherwise specified tolerances references: UNI EN 22768/1 m – UNI EN 22768/2 K

MODIFICHE/CHANGES Rev.	Rif./Ref.	Firma/Signature	Data/Date
6			
5			
4			
3			
2			
1	6962	Gonzo	15/01/13

LINEAR LENGHTS ...6	>6 ...30	>30 ...120	>120 ...400	>400 ...1000	ISO METRIC THREADS		ANGLES ±1°
±0.1	±0.2	±0.3	±0.5	±0.8	Male	6g	HOLES
					Female	7H	±0.1

amer
Motori, motoriduttori e sistemi di trazione a CC
DC motors, gearmotors and traction systems

Stampo/Mould

Denominazione/Title

MTRMP11 250/750
24V 750W 4.5km/h

Codice/Code
6962193

This document is proprietary to Amer S.p.A. and shall not be used or disclosed to others without the written autorization of Amer S.p.A.